CIRCUIT DIAGRAM

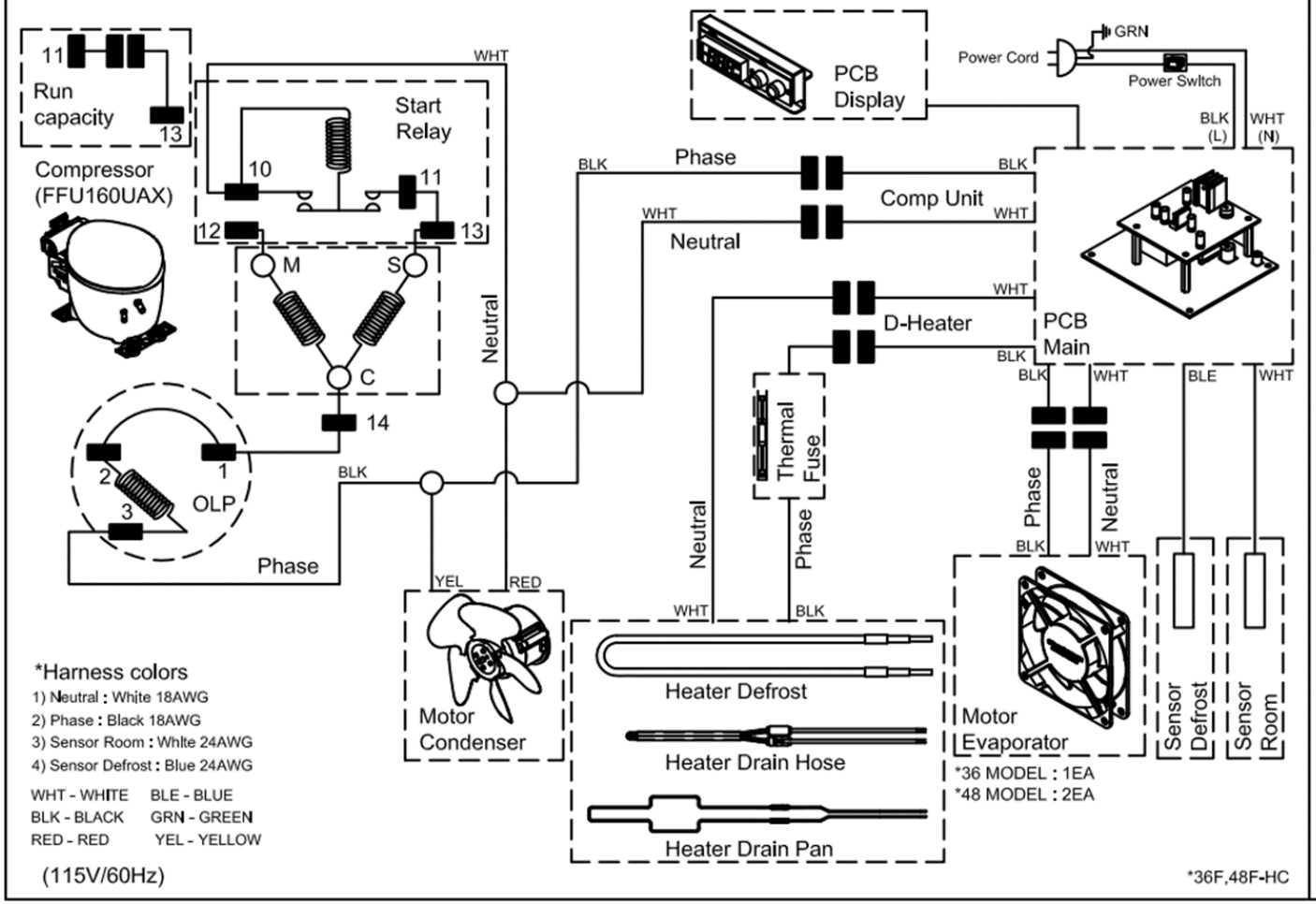

*Harness colors

1) Neutral : White 18AWG
2) Phase : Black 18AWG
3) Sensor Room : White 24AWG
4) Sensor Defrost : Blue 24AWG

WHT - WHITE BLE - BLUE
BLK - BLACK GRN - GREEN
RED - RED YEL - YELLOW

(115V/60Hz)

PCB LAYOUT

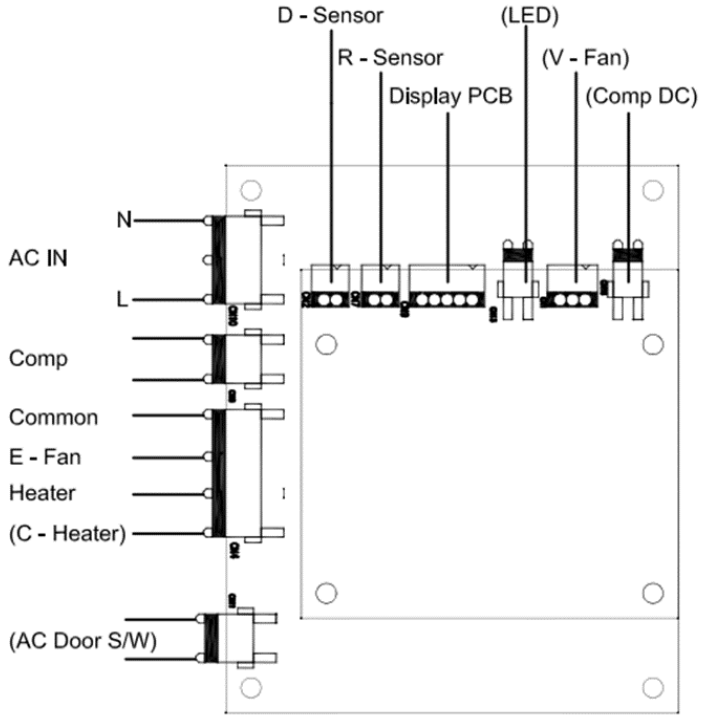

R510D-840